Single Image Dehazing Using Quantization Aware Swin Transformer Based Unet Architecture

Sivaji Satrasupalli
Assistant Professor,Department of Computational Intelligence,School of Computing,Faculty of Engineering and Technology, SRM Institute of Science and Technology Kattankulathur.
Chennai, India
sivajis@srmist.edu.in

Prathiba Jonnala
Assistant Professor,Department of Electronics and Communication Engineering, Vignan's Foundation for Science Technology and Research, Guntur,
Andhra Pradesh-52213
jp_ece@vignan.ac.in

Simhadri Ravishankar
Department of ECE,
School of Engineering,
Amrita Vishwa Vidyapeetham,
Chennai, India
r_simhadri@ch.amrita.edu

2025 11th International Conference on Communication and Signal Processing (ICCSP) | 978-1-6654-5736-1/25/$31.00 ©2025 IEEE | DOI: 10.1109/ICCSP64183.2025.11088784

***Abstract*—This Haze arises due to extreme bad weather conditions, and it causes light refraction due to the presence of suspended particles in the air and that reduces the visibility of the distant objects. Light scattering from suspended particles severely limits the visibility range of the objects. Such scenarios rarely happen due to inclement weather conditions and to address this issue, a simple yet effective image dehazing techniques are highly appreciated for next level applications such as lane detection, object detection, scene localization etc. Estimation of depth and airlight are two critical parameters in reconstructing the haze-free image. Many researchers have contributed to estimating the transmission map and airlight separately, and a haze-free image was reconstructed using an atmospheric scattering model. Recent advances in deep learning for modelling highly nonlinear systems have been extremely successful. In this paper, we presented a dehazing model using swin transformer based UNet architecture with long skip connections to improve learning.The performance of the proposed swin transforemer based UNet architecture for image dehazing is compared with the state-of-the-art methods on middlebury and IHAZE datasets in terms of computational complexity, SSIM, PSNR and SSEQ.**

Keywords—Deep-learning, Dehazing, Skip connections, UNet, Transmission map,Airlight

I. Introduction

As hazy images are difficult to model, that poses a challenge for high-level tasks such as object detection, segmentation, and object localization, etc,. It is primarily caused by very small droplets suspended in the air, which are responsible for the scattering of the light [1]. It is critical to recover the haze-free image to automate the decision regarding object detection in autonomous vehicles [2]. atmospheric scattering model was the basis for recovering the the hidden clear image from haze effected image. To solve atmospheric scattering model two parameters are essential namely transmission map and airlight. Image dehazing techniques are broadly categorized as enhancement-based methods, polarization based, prior based and learning based methods.several researchers have proposed different methods to estimate these parameters but suffering from one of the several problems like sky region, edge artifacts, color shifting, uneven darkening of the foreground, over smoothing and losing edge detail.transmission map estimation is directly related depth map estimation and any one is sufficient for solving the scattering model. Kumar et al. [3] used colour uniformity prior to estimate haze thickness. [4] proposed to enhancing the local contrast using Markov Random Fields (MRF), however, this method suffers from color shifting.

Later,[5] used polarization-based methods, which require multiple images under different weather conditions, but practically not viable to get multiple images. Hence, recently prior-based single image dehazing methods became popular, particularly after Dark Channel Prior. [6] discovered a statistical relationship between haze thickness and minimum channel value, and soft matting was used to refine the estimated depth for reducing the edge artifacts but it is very computationally intensive process. Later,[7] also proposed a guided filter for smoothing the transmission map without losing edge information. a simplified version called fast guided filter in [8] is used to reduce computational time. Following DCP, many researchers proposed various priors with various combinations of refinement algorithms. Nair et al. [9] implemented DCP in conjunction with a surround filter, but these methods frequently suffer from sky region, over saturation, and artifacts at depth irregularities. Color Attenuation Prior (CAP) was discovered by Zhu[10] as the underlying relationship between the value-saturation difference and depth map but suffers from colour shifting. [11] addressed the saturation problem in DCP by avoiding over and under estimation of the transmission map.[12] proposed a simple Mean Channel Prior (MCP) for estimating the transmission map, but it suffers from colour saturation at very dense haze regions.

Later, learning based methods have been employed to recover haze free images.[13] proposed a DehazeNet that calculates transmission maps using a convolutional neural network. DehazeNet was trained on small patches derived from the hazy image, but inference time is very high due to its complex network architecture. Instead of estimating the transmission map and airlight separately,[14] proposed an end-to-end dehazed network to produce the dehazed image. In [15], a generative adversarial network was used to generate depth features, while [16] applied semi-supervised learning to achieve better generalization by taking into account the loss from both supervised and unsupervised paths. In learning-based methods, hyper parameters such as weight updating mechanisms, regularization techniques, and learning rate have a significant impact on output quality.grid search based optimum combination of these hyper parameters were employed in our work.[17] demonstrated the beneficial effect of removing some of the weights in the network on testing error. Another regularisation method, skip connections, is used to improve the learning process in [18]. With recent advances in deep learning architectures such as AoD [19] proposed a deep learning based all in one dehaze net, it is a five layer convolutional neural network divided into two parts, to estimate the depth map first and generating the clean image

Authorized licensed use limited to: Siddhartha Academy of Higher Education Deemed To Be University. Downloaded on February 05,2026 at 09:30:57 UTC from IEEE Xplore. Restrictions apply

in the later part. It is first model to integrate both depth map estimation and restoration of the clean image.[20] introduced a compensatory term in transmission map to reduce artifacts.[21] Presented a CNN based multilevel feature fusion using long skip connections. Feature fusion net (FFA) [22] done fairly good on thick haze images.Vision transformer(ViT) [23] based on self attention mechanism have shown remarkable improvement but It needs huge data for training and also computational complexity increases four fold as image size increases. [24]Presented as new approach to estimate the depth map of the noise effected images by integrating the advantages of both CNN for local feature extraction and transformers for global feature extraction and produced better results and this concept can extended to image dehazing also. Conventional CNNs are generally local feature extractors but transformers have advantage of modelling long range dependency and hence able to get global relation.[25]Applied double Unet with depthwise convolutions and multi branch interactive fusion for address heavily thick hazy regions, Swin transformer [26] is another milestone in making the transformer based models with reduced computational complexity by employing powerful shifting window concept to get the global features without increase in computational complexity.We presented the Swin transformer based UNet architecture inspired from Sunet[27] for single image dehazing in this paper.The proposed architecture was trained using a variety of datasets that included both real and synthetic images. The results of our method were thoroughly investigated and compared with state-of-the-art methods on standard datasets such as IHAZE [28],Dense haze[29,30] and Middlebury.

Summary of our contributions as follows

(1) We have proposed swin transformer based Unet architeture for image dehazing with long skip connection between the encoder and decoder for transmitting the features of different scale.

(2) Presented the competitive results on IHAZE, Dense Haze and RESIDE dataset in terms of both full reference metrics such as SSIM, PSNR and no reference metric called SSEQ.

II. RELATED WORK

A. Atmospheric scattering model

Many researchers have contributed to single image dehazing, but it is discovered in the literature that they all used the same mathematical model of dehazing. McCartney et al. [31] proposed an optical model for light scattering, which was later improved in [32]. Fig. 1. depicts the effect of light scattering and, as a result, the formation of haze.

In the above equation, I is the two-dimensional image received by the camera, 't' is the transmission map that represents the spatial concentration of haze, and A is the airlight. The haze transmission map can be expressed as a function of the depth of each object in equation (1).

$$t = e^{-\beta d} \quad (1)$$

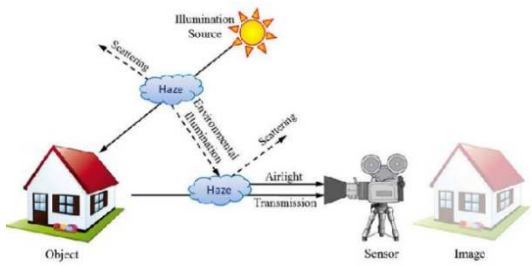

Fig. 1. Atmospheric Scattering [7]

where, *d* denotes the depth of each object in the image and β is the scattering coefficient. It is clear from the above equation that when the object is very close to the camera, i.e. d=0, transmission is good and there is no effect of haze, but when the object is farthest with respect to the camera, d tends to infinity, indicating full haze and no object visible.

$$I = A \text{ for } d = \alpha \;\&\; I = J \text{for } d = 0 \quad (2)$$

B. *Learning based methods*

[13] proposed DehazeNet for estimating the scattering model's transmission map. It is a method based on supervised learning. The DehazeNet is a very complex network that was trained on over a lakh images with patches of size 16 x 16 collected from various datasets. In the final layer, the BReLu activation function was used. The objective function was the mean square error between the ground truth and the estimated output. It provided new opportunities for learning-based solutions for single-image dehazing. Despite the use of CNN-based DehazeNet, it still relies on the scattering model for haze-free image construction. Feature attention network (FFA)[22] uses both channel attention and pixel attention deals more efficiently for heavily haze effected areas.recently transformer based methods were performing better for text modelling and it was adopted for vision processing by introducing pachify module called vision transformer[33].

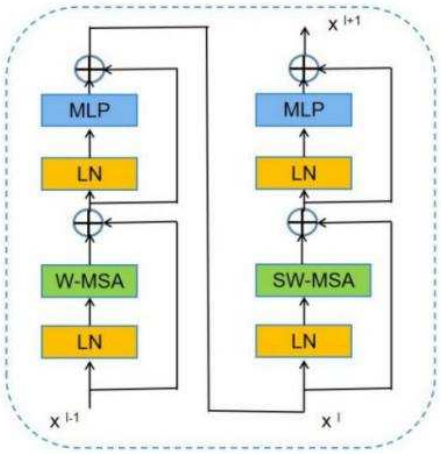

Fig. 2. Swin Transformer consecutive Layers

III. PROPOSED METHOD

CNN architectures have been successful in replacing the manual process of feature engineering in image processing applications with automatic learning of hidden complex patterns. But CNN can process local data with small filters and could not model long range dependency.

Authorized licensed use limited to: Siddhartha Academy of Higher Education Deemed To Be University. Downloaded on February 05,2026 at 09:30:57 UTC from IEEE Xplore. Restrictions apply

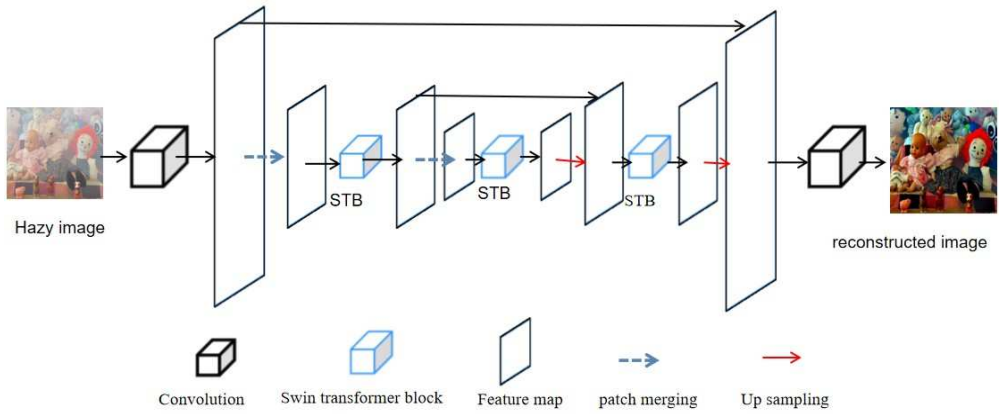

Fig. 3. Transformer based Unet architecture

In this paper, a novel Swin transformer based Unet architecture was proposed for direct estimation of the haze free image. single network is used to estimate the haze free image without relying on the atmospheric scattering model by avoiding estimating transmission map and airlight separately.Earlier methods mostly estimated both depth map and transmission map separately and substituted in the atmospheric scattering model and In this method, we avoid the need of estimating transmission map, airlight separately. The proposed architecture is depicted in Fig. 3. We trained the model using approximately 50k images from various datasets.

The proposed architecture is mainly composed of three blocks illustrated in Fig. 3. first module is shallow convolution layer, second is feature extraction using swin transformer based Unet and lastly reconstruction layer.*hallow CNN module*

Hazy image $I_{Hazy} \in \mathbb{R}^{H \times W \times 3}$ where H and W are height and width of the image. CNN shallow feature extractor, used to extract the low frequency features from the hazy image with 96 channels given in equation (3).

$$X_{shallow} = CNN(I_{Hazy}) \quad (3)$$

A. Swin transformer based Unet feature extractor

It is used to extract the deep features using swin transformer blocks, each swin transformer block is having 16 layers and each layer having both normal window and shifted window as shown in Fig.1. as per equation (4).

$$Y_{deep\ feature} = N(X_{shallow}) \quad (4)$$

Where N is the swin transformer architecture.Finally reconstruction layer is used to reconstruct the haze free image. Swin transformer block (STB) shown in Fig. 2. is successive connection of two blocks , first one is computing the self attention on normal window and the next block is shifted version of the window for ensuring the cross connection for global feature extraction.the following equations (10) represents the working of STB.

$$\hat{x}^{l-1} = x^{l-1} + WMSA(LN(x^{l-1}))$$
$$x^{l} = \hat{x}^{l-1} + MLP(LN(\hat{x}^{l-1}))$$
$$\hat{x}^{l} = x^{l} + WMSA(LN(x^{l})) \quad (5)$$

$$x^{l+1} = \hat{x}^{l} + MLP(LN(\hat{x}^{l}))$$

Self attention employed in the swin transformer block and that can be calculated as follows

$$attention(Q, K, V) = Softmax(QK^{T}/\sqrt{d} + B)V \quad (6)$$

Where Q,K,V are Query, key and Value matrices, d is the Query dimension and B is the relative position bias.The proposed network having 10 layer and three STBs and each STB has 16 layers. Patch merging layer is used for down sampling in the encoder path. Sigmoid activation function was used in all the layers and ReLU activation function in he last layer. We have employed a combination of regularization techniques called Skip connections and dropout for better learning and generalization. Despite of L2 loss function popularity, we have adopted the L1 loss function to optimize the parameters of the model. Based on literature of learning based image dehazing methods, L1 loss optimizes better than L2 loss.L1 regularization allows more parameters turning to zero and hence better feature selection happens. Loss function L1 used in this work as follows

$$L(\Theta) = \frac{1}{N}\sum_{i=1}^{N}\left\|I_{GT}^{i} - \text{Restored Image}\right\| \quad (7)$$

Where Θ is learning parameters, N is number of pixels, I_{GT}^{i} is the ground truth image. The Adam optimizer is used to update the network weights based on the L1 loss function. The dataset was carefully tailored to avoid underfitting and overfitting of the model. The model was trained for 50 epochs.

IV. RESULTS AND DISCUSSION

The proposed image dehazing method was tested on a variety of data from various datasets. We trained the model on hazy image datasets such as FRIDA, RESIDE, IHAZE, and NYU depth maps. Image quality can be evaluated using three methods namely no reference, reduced reference, and full reference metrics. we used full reference metrics SSIM and PSNR, as well as a no-reference metric called SSEQ (spatial spectral entropy quality) [30] for performance analysis. The Structural Similarity Index (SSIM) is a measure of the reconstructed image's similarity to the ground truth, with a

Authorized licensed use limited to: Siddhartha Academy of Higher Education Deemed To Be University. Downloaded on February 05,2026 at 09:30:57 UTC from IEEE Xplore. Restrictions apply

(a) (b) © (d) (e) (f)

Fig. 4. SOT indoor images from RESIDE dataset of (a) Hazy image , (b) Cai method, (c) Li.B method, (d) Zhanget method, (e)FFA method and (f) Proposed.

value in the range of (0,1), where zero represents no correlation and one represents that both images are the same. PSNR measures the signal's strength in relation to noise. For different datasets, all three metrics were computed for the proposed model and compared to state-of-the-art methods.

The SSIM and PSNR are complete reference metrics, whereas the SSEQ does not. It is clear that the proposed CNN-based architecture improves performance. we have applied quantization aware training having two benefits , it is worked as regularized and also reduced memory requirement because it replaced the floating point operations with integer operations. Our method was thoroughly tested on different dataset with different levels of haze. TABLE I show that our method has shown superior performance over the recent methods in terms of full reference metrics SSIM/PSNR and no reference metric SSEQ.

TABLE I SSIM/PSNR/SSEQ Comparision on SOT images of RESIDE dataset

Method	SSIM	PSNR	SSEQ
Cai et al., 2016	0.8851	22.13	0.63
Li B et al., 2017	0.8245	19.49	0.74
Zhanget al., 2024	0.8459	21.11	0.71
FFAnet 2020	0.9101	22.87	0.78
Proposed	0.9112	22.91	0.81

.

The proposed architecture initialized with learning rate of 0.001. With these parameters, the model was trained on 50K images collected from various datasets in 50 epochs with a batch size of 64 images. The network's complexity is lighter than the DehazeNet, and thus computation time is faster. The model was trained in quantization aware (QAT) method to reduce the memory overhead and hence to reduce the computational complexity. Otherwise floating point parameters takes 16 bytes per parameter, now consumes only 4 bytes per parameter. The advantages of swin transformer has been utilized for reconstruction of haze free image.TABLE II shows the execution time taken by each method in seconds for an input image size of 225^2.The proposed method has taken 0.71 sec which is better than the existing methods and it is attributed to adapted quantization method.

Fig. 4. presents the subjective performance comparison of the proposed method with the state of the art methods and can be noticed that the improvement in the contrast of the proposed method over the others.

TABLE II Computation complexity of the proposed method

Method	Execution time (Sec)
Cai et al., 2016	1.2
Li B et al., 2017	1.0
Zhanget al., 2024	0.95
FFAnet 2020	0.96
Ours	0.71

V. CONCLUSION

In this paper, we propose a ten-layered Swin transformer based Unet deep learning architecture for generating haze-free images without relying on an atmospheric scattering model. Dropout and long skip connections were used to reduce training error and improve performance on unseen data with the proposed deep learning model. The model was trained using 1 Lakh image patches from various datasets under various lighting conditions. Using Google Co labs, the model was trained for 50 epochs. After training the model, its performance was compared to existing methods, and the improved performance in terms of SSIM and PSNR on benchmark datasets was demonstrated. Objective analysis

Authorized licensed use limited to: Siddhartha Academy of Higher Education Deemed To Be University. Downloaded on February 05,2026 at 09:30:57 UTC from IEEE Xplore. Restrictions apply

revealed that the output images were darker in the regions of heavy haze affected areas.

REFERENCES

[1] Narasimhan, SG., Nayar, SK: "Vision and the atmosphere," International journal of computer vision, 48 (3), 233-254 (2002).

[2] Guo, L., Song, J., and Li, XR et al, "Haze Image classification method based on Alexnet network transfer model," In Journal of Physics: Conference Series, 1176 (3), (2019).

[3] Kumar, H., Gupta, S., and Venkatesh, KS: "Realtime dehazing using colour uniformity principle," IET Image Processing, 13(11),1931-1939 (2019).

[4] Tan, RT: "Visibility in bad weather from a single image," IEEE conference on Computer Vision and Pattern Recognition, 1-8 (2008)

[5] Schechner, Y., Narasimhan, SG., and Nayar, K. "Instant dehazing of images using polarization," In Proceedings of the 2001 IEEE Computer Society Conference on Computer Vision and Pattern Recognition. CVPR 2001 (Vol. 1, pp. I-I). IEEE.

[6] He, K., Sun, J., and Tang, X., "Single image haze removal using dark channel prior," IEEE transactions on pattern analysis and machine intelligence 33(12), 2341-2353 (2010).

[7] He, K., Sun, J., and Tang, X., "Guided image filtering," In European conference on computer vision, 1-14 (2010).

[8] He, K., Sun, J., : "Fast guided filter," arXiv preprint arXiv:1505.00996 (2015).

[9] Nair, D., Sankaran, P., "Color image dehazing using surround filter and dark channel prior," Journal of Visual Communication and Image Representation, 1(50), 9-15 (2018).

[10] Zhu, Q., Mai, J., and Shao, L., "A fast single image haze removal algorithm using color attenuation prior," IEEE transactions on image processing, 24 (11), 3522-3533 (2015).

[11] Agrawal, SC., : Agarwal, R. "A novel contrast and saturation prior for image dehazing," Vis Comput (2022).

[12] Satrasupalli, S., Daniel, E., Guntur, SR., and Shehanaz, S., " End to end system for hazy image classification and reconstruction based on mean channel prior using deep learning network," IET Image Processing 14(17),4736-43(2021).

[13] Cai, B., Xu, X., and Jia, K., "Dehazenet: An end-to-end system for single image haze removal," IEEE Transactions on Image Processing, 25 (11), 5187-5198 (2016).

[14] Satrasupalli, S., Daniel, E., Guntur, SR.,"Single image haze removal using CNN based encoder-decoder architecture," In 2022 International Conference on Communication, Computing and Internet of Things (IC3IoT) (pp. 1-4). IEEE (2022).

[15] Yang, F., Zhang, Q. "Depth aware image dehazing," Vis Computer 38, 1579–1587 (2022).

[16] An, S., Huang, X., Wang, L. et al. "Semi-Supervised image dehazing network," Vis Computer 38, 2041–2055 (2022).

[17] Srivastava N, Hinton G, and Krizhevsky A , "Dropout: a simple way to prevent neural networks from overfitting," The journal of machine learning research, 15(1), 1929-1958 (2014).

[18] Li, H., Xu, Z., Taylor, G., Studer, C., and Goldstein, T.," Visualizing the loss landscape of neural nets," Advances in neural information processing systems,31(2018).

[19] Li B, Peng X, Wang Z, Xu J, Feng D. "Aod- net: All-in-one dehazing network," In Proceedings of the IEEE international conference on computer vision 2017 (pp. 4770-4778).

[20] Dai C, Lin M, Wu X, Zhang D. "Single hazy image restoration using robust atmospheric scattering model," Signal Processing. 2020;166: 107257.

[21] Xie, Z., Li, Q., Zong, S. and Liu, G., 2023. "Multiscale feature fusion deep network for single image dehazing with continuous memory mechanism," Optik, 287, p.171144.

[22] Xu Qin, Zhilin Wang, et.al, "FFA- Net: Feature fusion attention network for single image dehazing,"In Proceedings of the AAAI conference on artificial intelligence (Vol. 34, No. 07, pp. 11908-11915).

[23] Han, K., Wang, Y., Chen, H., Chen, X., Guo, J., Liu, Z., Tang, Y., Xiao, A., Xu, C., Xu, Y. and Yang, Z., 2022. "A survey on vision transformer," IEEE transactions on pattern analysis and machine intelligence, 45(1), pp.87-110.

[24] Lv, C., Han, C., Chen, J., Cheng, D. and Qian, J., 2023. "TSD-Depth: Using transformers and self-distilling for self-supervised indoor depth estimation," Optik, 288, p.171219.

[25] Zhang, X., Zhang, L., Chu, M. and Wang, S., 2024. "DU-Net: A new double U-shaped network for single image dehazing," Journal of Visual Communication and Image Representation, 100, p.104132.

[26] Liu, Z., Lin, et.al. "Swin transformer: Hierarchical vision transformer using shifted windows," In Proceedings of the IEEE/CVF international conference on computer vision (pp. 10012-10022).

[27] Fan, C.M., Liu, T.J. and Liu, K.H., 2022, May. SUNet: Swin transformer UNet for image denoising. In 2022 IEEE International Symposium on Circuits and Systems (ISCAS) (pp. 2333-2337). IEEE.

[28] Ancuti, C., Ancuti, CO., Timofte, R., Vleeschouwer, CD.,: "I-HAZE: a dehazing benchmark with real hazy and haze-free indoor images," In International Conference on Advanced Concepts for Intelligent Vision Systems, 620-631,2018.

[29] C.O. Ancuti, C. Ancuti, M. Sbert, R. Timofte "Dense haze: A benchmark for image dehazing with dense-haze and haze-free images," IEEE International Conference on Image Processing (ICIP), 2019

[30] Codruta O Ancuti and Cosmin Ancuti and Radu Timofte and LucVanGool and Lei Zhang and Ming-Hsuan Yang "NTIRE 2019 Image Dehazing Challenge Report", IEEE CVPR Workshop, 2019

[31] McCartney, EJ.,: "Optics of the atmosphere: scattering by molecules and particles," John Wiley and Sons, Inc., (1), (1976).

[32] Nayar, SK., and Narasimhan, SG., : "Vision in bad weather," IEEE International Conference on Computer Vision, 2, 820– 827(1999).

[33] Han, K., Wang, Y., Chen, H., Chen, X., Guo, J., Liu, Z., Tang, Y., Xiao, A., Xu, C., Xu, Y. and Yang, Z., 2022. "A survey on vision transformer," IEEE transactions on pattern analysis and machine intelligence, 45(1), pp.87-110.

Authorized licensed use limited to: Siddhartha Academy of Higher Education Deemed To Be University. Downloaded on February 05,2026 at 09:30:57 UTC from IEEE Xplore. Restrictions apply